CapSense Express Evaluation Board - CAPEXP2

Rev *A

PDCR: 9459 Rev*A
PCA: 121R: 45900 Rev*A

CYPRESS SEMICONDUCTOR © 2009

Title: CapSense Express CY3218A_CAPEXP2		
Size: A	Document Number: REF_14696	Rev: *A
Date: Monday, October 05, 2009	Sheet 1 of 6	

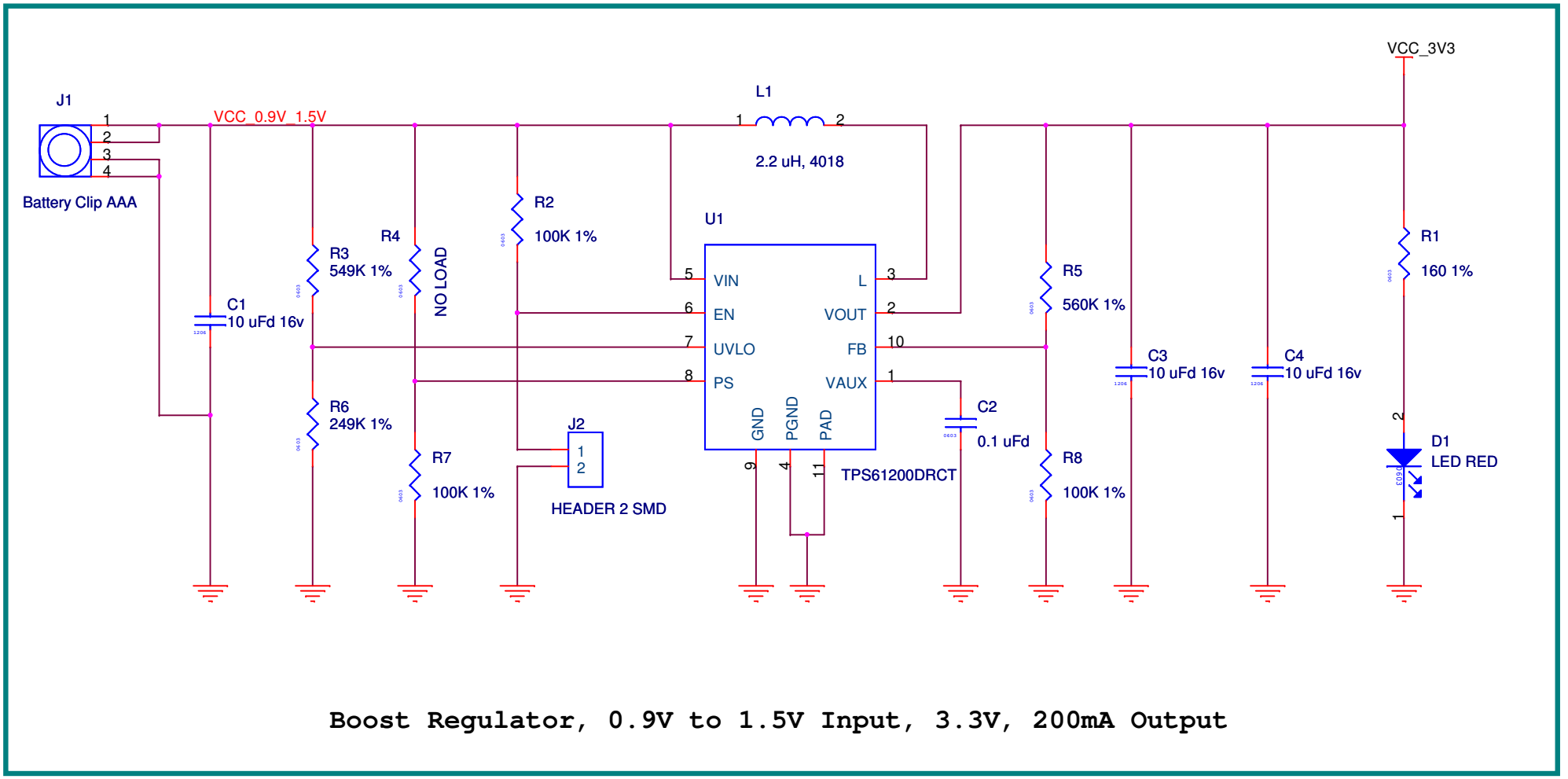

Boost Regulator, 0.9V to 1.5V Input, 3.3V, 200mA Output

PDCR: 9459 Rev*A
PCA: 121R: 45900 Rev*A

CYPRESS SEMICONDUCTOR © 2009		
Title: CapSense Express CY3218A_CAPEXP2		
Size: A	Document Number: REF_14696	Rev: *A
Date: Monday, October 05, 2009	Sheet 2 of 6	

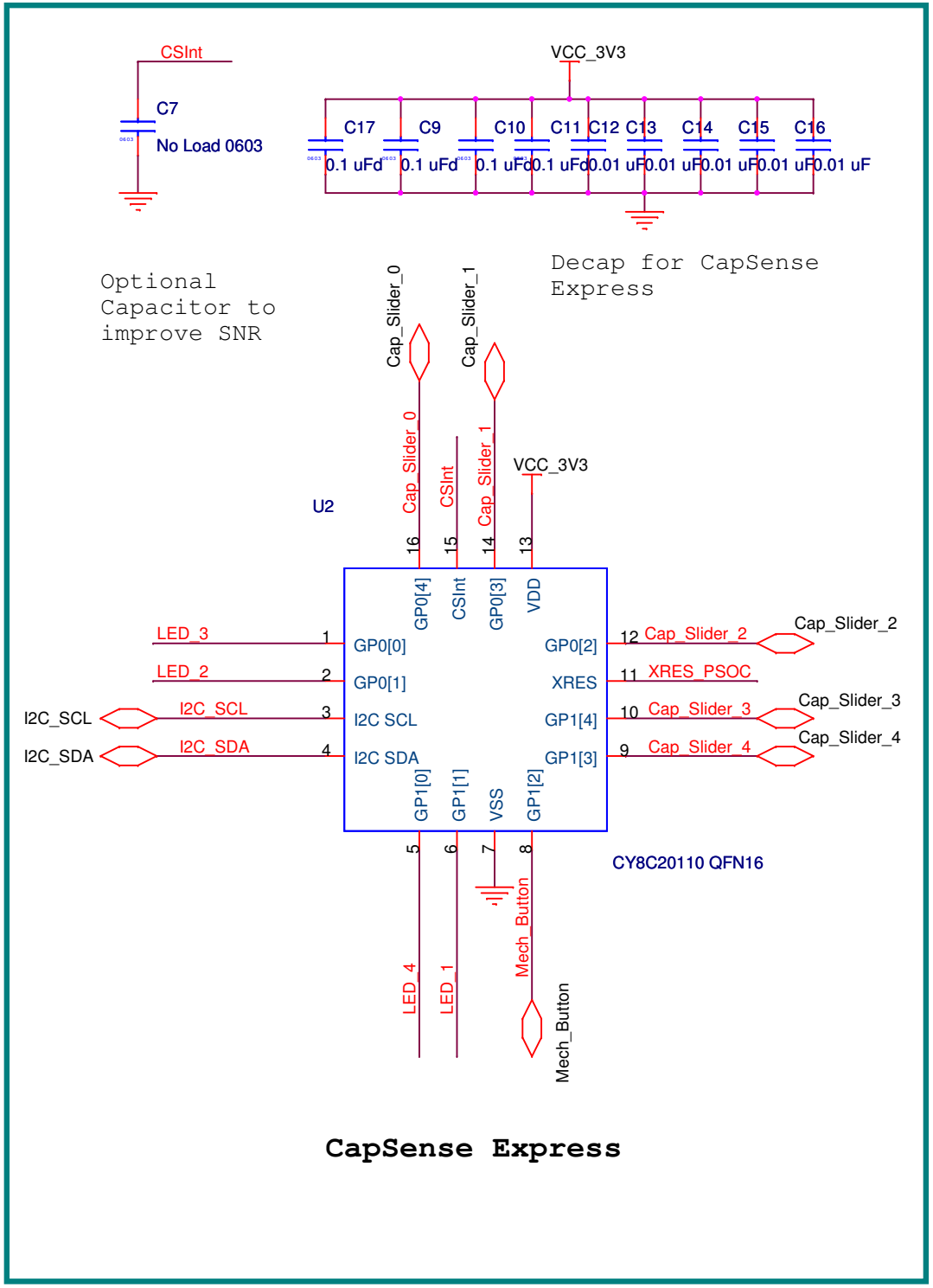

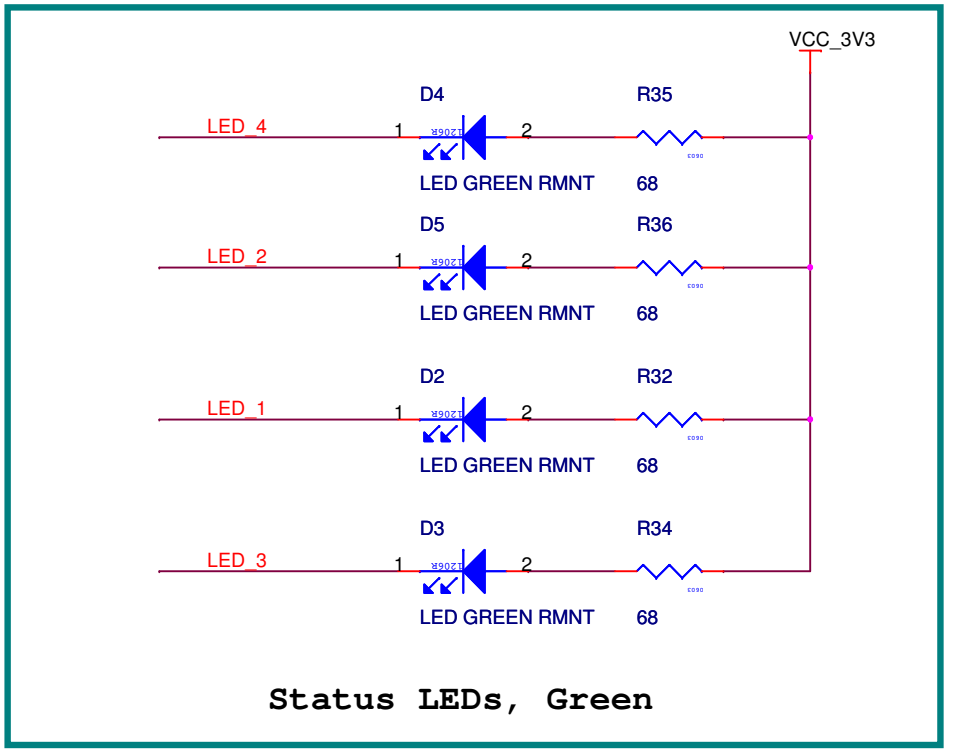

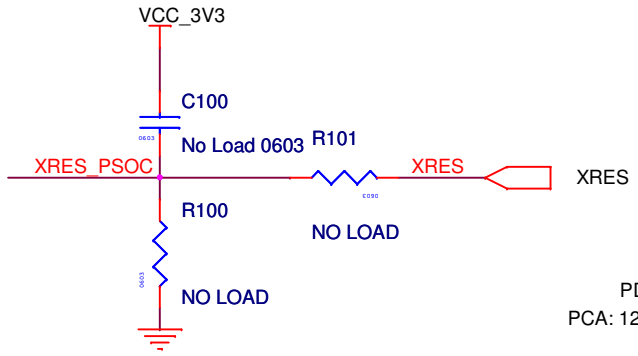

PDCR: 9459 Rev*A
PCA: 121R: 45900 Rev*A

CYPRESS SEMICONDUCTOR © 2009		
Title: CapSense Express CY3218A_CAPEXP2		
Size: A	Document Number: REF_14696	Rev: *A
Date: Monday, October 05, 2009	Sheet 3 of 6	

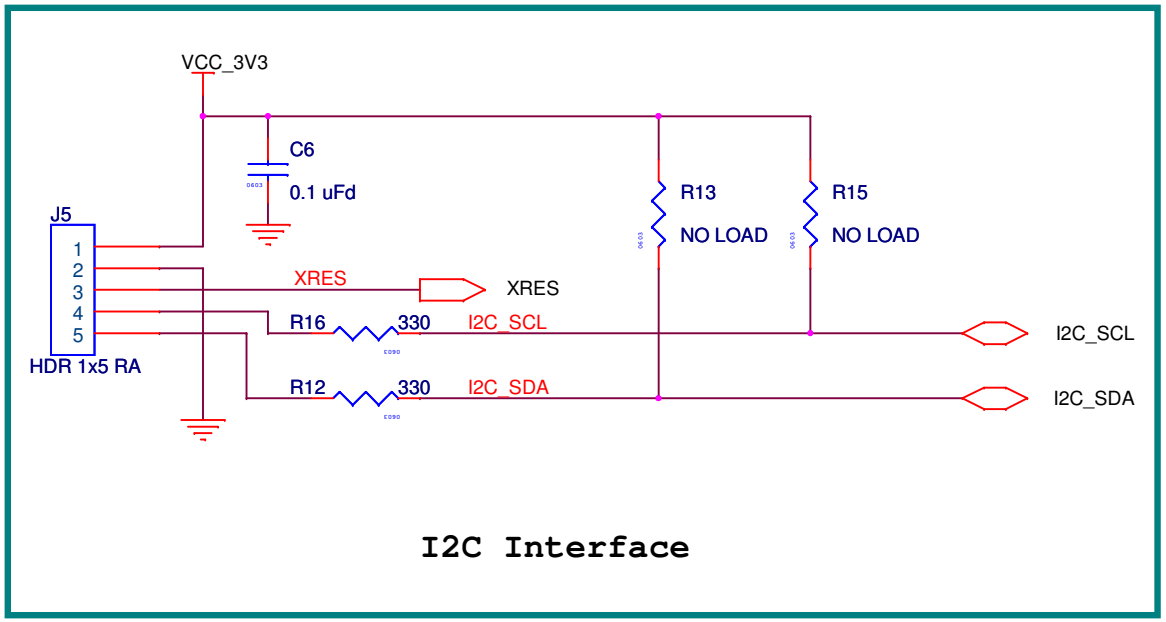

I2C Interface

PDCR: 9459 Rev*A
PCA: 121R: 45900 Rev*A

CYPRESS SEMICONDUCTOR © 2009		
Title: CapSense Express CY3218A_CAPEXP2		
Size: A	Document Number: REF_14696	Rev: *A
Date: Monday, October 05, 2009	Sheet 4 of 6	

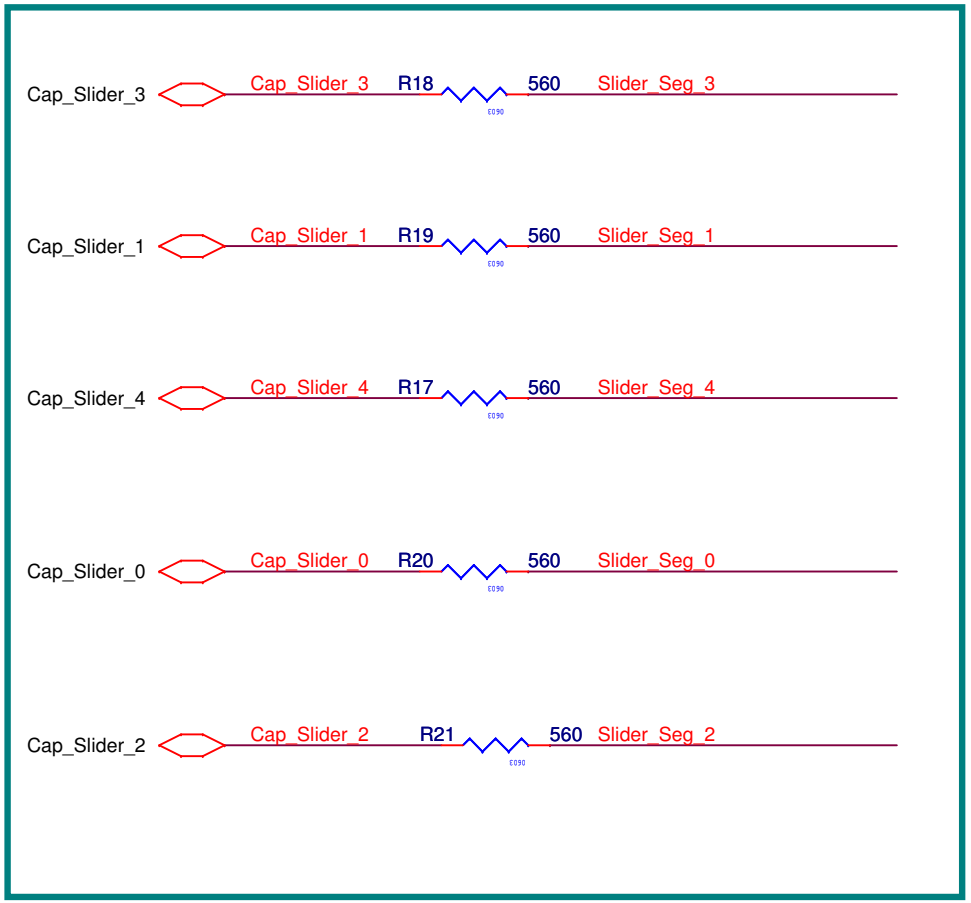

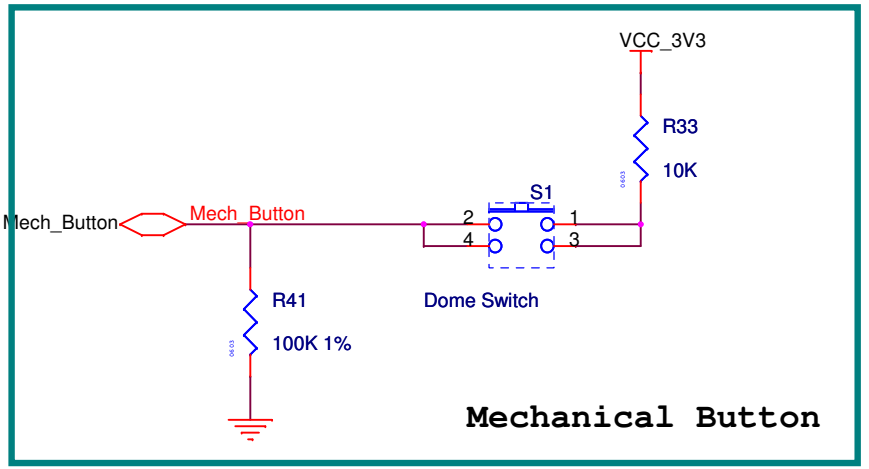

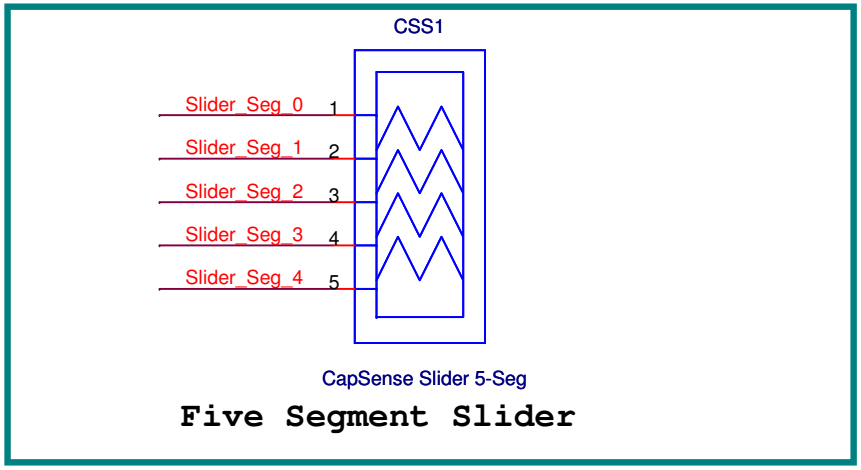

PDCR: 9459 Rev*A
PCA: 121R: 45900 Rev*A

CYPRESS SEMICONDUCTOR © 2009		
Title: CapSense Express CY3218A_CAPEXP2		
Size: A	Document Number: REF_14696	Rev: *A
Date: Monday, October 05, 2009	Sheet 5 of 6	

Revision History

Revision	Date	Changes
1.0	20-Aug-2007	Initial Revision
1.1	20-Aug-2007	Internal Review Comments Updated CY8C20110 Symbol updated with the new datasheet
1.2	22-Aug-2007	Cypress Review Comments Updated
1.3	22-Aug-2007	Jumper Connector added in Series with the ISSP Programmer lines Zero ohm resistors replaced with no load resistors in capsense jumpers section
1.4	30-Aug-2007	Changed as per review comments from Layout 1. Changed Slider and Button combinations to Segment 4 with Button 1, Segment 5 with Button 3, Segment 1 with Button 4, Segment 3 with Mech Button 2. Changed CapSense and Keypad LED backlight lines to PSOC to avoid less criss cross
1.5	04-Sep-2007	1. Changed Button 1 and Button 3 connections to avoid criss cross 2. Changed the ISSP Header
1.6	05-Sep-2007	1. No load pull up resistors added in the I2C_SCL and I2C_SDA lines 2. Series resistor for Power LED changed to 160 ohm to avoid overcurrent during programming
1.7	05-Sep-2007	1. Jumper and Pull down resistor added for boost regulator enable pin 2. Backannotation done
1.8	24-Sep-2007	1. Pull down resistor added in Mechanical button interface 2. Backlight and Power LED Footprint name updated
1.9	18-Oct-2007	1. ISSP Interface and Jumpers for ISSP Interface Removed
2.1	24-Oct-2008	RC for the XRES line has been added as DNP
2.1	03-Dec-2007	1. Modified to support 1 5-segment Slider, 4 Status LEDs and 1 Mechanical Switch 2. Removed LCD Module and CapSense Buttons
**	12-Aug-2009	1. Modified CapSense Slider connections as per layout 2. Modified Status LED connections as per layout
*A	05-Oct-2009	Star A Revision

PDCR: 9459 Rev*A
PCA: 121R: 45900 Rev*A

CYPRESS SEMICONDUCTOR © 2009

Title: CapSense Express CY3218A_CAPEXP2		
Size: A	Document Number: REF_14696	Rev: *A
Date: Monday, October 05, 2009	Sheet 6 of 6	